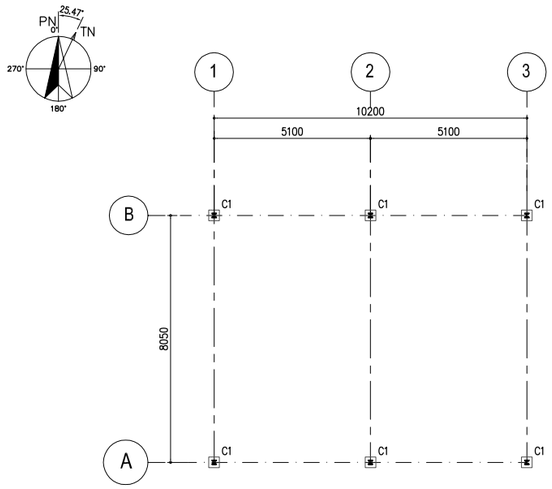

BASE PLATE PLAN EL.+1.500 (B.O.BASE PL)
SCALE 1 : 100

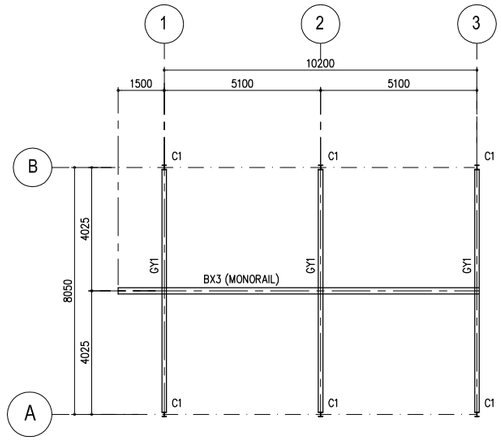

FRAMING PLAN EL.+5.100 (T.O.S)
SCALE 1 : 100

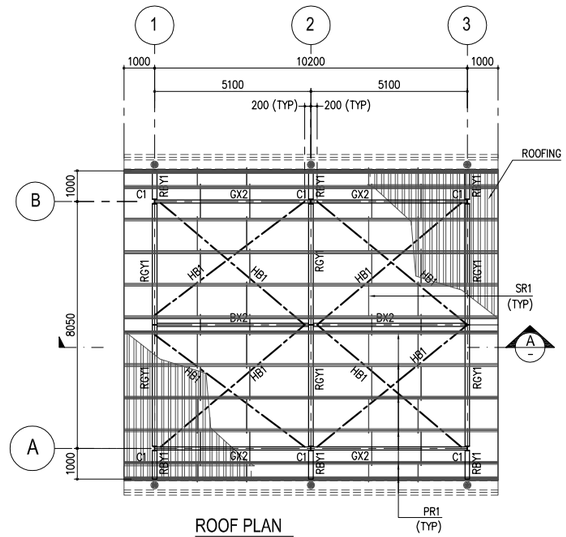

ROOF PLAN
SCALE 1 : 100

KEY PLAN

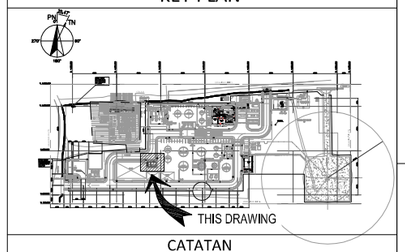

CATATAN

NOTE :

1. ALL DIMENSIONS ARE IN MILIMETERS, ELEVATION AND COORDINATE ARE IN METERS UNLESS OTHERWISE NOTED.
2. REFERENCE OF ELEVATION AND COORDINATE
   GL ± 0.000 = MSL +33.75 = +1.100
3. MATERIAL SPECIFICATION :
   a. STEEL STRUCTURE : ASTM A36 OR JS 63101 SS400
      OR SNI 03–1729–2002 OR EQUIPMENT
      FY = 2400 KG/CM2
   a. BOLT
      – FOR STRUCTURAL (HIGH STRENGTH BOLT) : ASTM A325
        OR JIS B1180 OR EQUIVALENT
      – FOR NON STRUCTURAL (ORDINARY STRENGTH BOLT) : ASTM A307
        OR JIS B1180 OR EQUIVALENT
4. WELDING ELECTRODES : AWS–AS.I E70 SERIES OR JIS 23212
   D50 SERIES OR EQUIVALENT

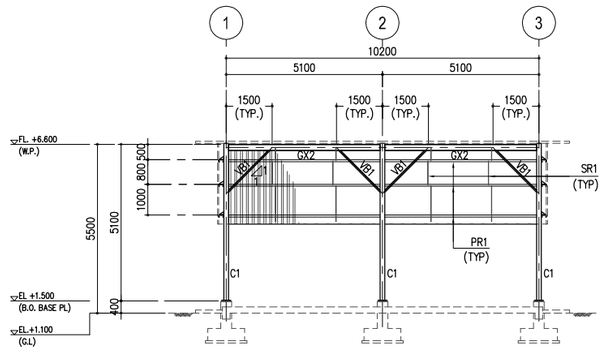

FRAMING ELEVATION LINE A & B
SCALE 1 : 100

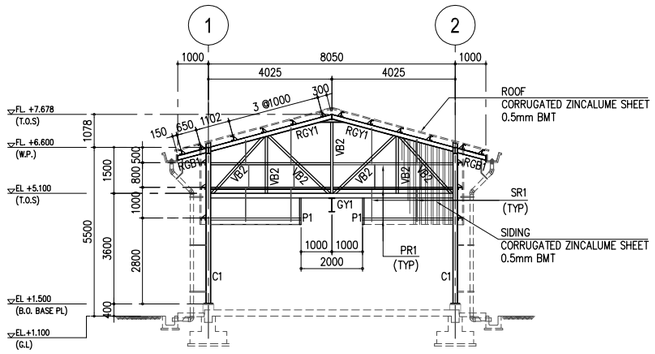

FRAMING ELEVATION LINE 1 & 3
SCALE 1 : 100

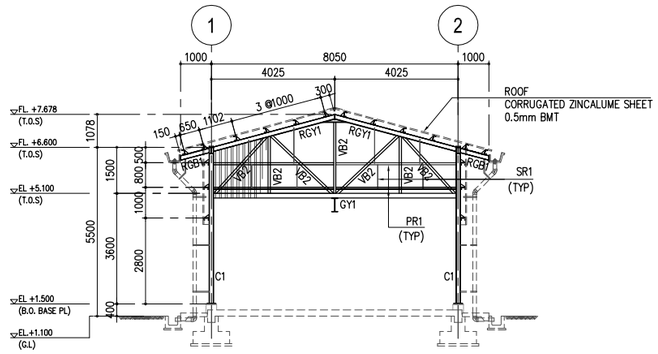

FRAMING ELEVATION LINE 2
SCALE 1 : 100

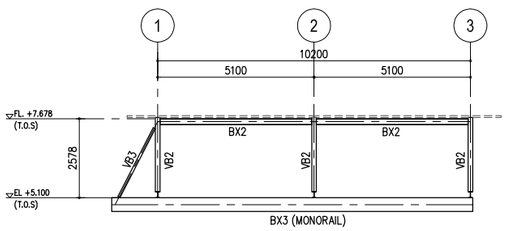

SECTION A
SCALE 1 : 100

MEMBERS SCHEDULE

MEMBER	MARK	PROFILE	REMARK
COLUMN	C1	H–150x150x7x10	
POST	P1	C–100x50x5x7.5	
GIRDER	GY1	H–150x150x7x10	
	GX2	H–200x100x5.5x8	
BEAM	BX2	H–200x100x5.5x8	
	BX3	H–450x200x9x14	MONORAIL
RAFTER	RGY1	H–150x150x7x10	
	RBY1	H–150x150x7x10	
BRACING	HB1	RB ø16 W/ TURN BUCKLE	
	VB1	L–50x50x5	
	VB2	2L–75x75x6	
	VB3	L–75x75x6	
PURLIN	PR1	C–150x65x20x3.2	
GIRT	GR1	C–150x65x20x3.2	
SAG ROD	SR1	RB ø12	

NOTES :

1. BEFORE STARTING CONSTRUCTION, CONTRACTOR SHALL VERIFY ACTUAL FIELD CONDITION AND DETERMINE LOCATION, ELEVATION OF EXISTING GRADING AND OTHER STRUCTURE. THE CONTRACTOR SHALL TAKE NECESSARY MEASURES TO HOLD SAFE AND PREVENT DAMAGE TO ANY EXISTING FACILITIES.

DRAWING REFERENCE	DESCRIPTION	REV	DATE	DESCRIPTION	PREPR'D	CHECK'D	APRV'D
TMBP–SP001–CS–ARC–105	ARC–HITECTURE FLOOR PLAN, ROOF PLAN AND ELEVATION FOR OILY PIT						
TMBP–SP001–CS–BLD–105	FOUNDATION PLAN, DETAIL AND SECTION OF OILY PIT SHELTER						
TMBP–SP001–CS–LAY–D102	OVERALL FOUNDATION LAYOUT				NAS	AS	RTN
TMBP–SP001–PI–PLP–101	OVERALL PLOT PLAN DRAWING	A	07/01/2026	ISSUED FOR REVIEW			

PT. PERTAMINA EP APPROVAL

CHECKED	APPROVED

PROCET :
JASA PEMBANGUNAN FASILITAS PRODUKSI STASIUN PENGUMPUL (SP)
TANJUNG MIRING BARAT & KARANGAN TIMUR

OWNER : skkmigas PERTAMINA EP

CONTRACTOR : POG

SCALE : 1 : 100

DRAWING NO. TMBP–SP001–CS–FRM–105

SHEET. NO. 1 OF 1

REV A

DRAWING TITLE :

FRAMING PLAN, ROOF PLAN, ELEVATION, SECTION & DETAIL FOR OILY PIT SHELTER